RG-AP630 Series Access Point

Hardware Installation and Reference Guide V1.2

Copyright statement

Exemption statement

This document is provided “as is”. The contents of this document are subject to change without any notice. Please obtain the latest information through the Ruijie Networks website. Ruijie Networks endeavors to ensure content accuracy and will not shoulder any responsibility for losses and damages caused due to content omissions, inaccuracies or errors.

Preface

Thank you for using our products. This manual will guide you through the installation of the access point.

Scope

It is intended for the users who have some experience in installing and maintaining network hardware. At the same time, it is assumed that the users are already familiar with the related terms and concepts.

Obtaining Technical Assistance

- Ruijie Networks website: http://www.ruijienetworks.com
- Ruijie service portal: http://case.ruijienetworks.com

Related Documents

Documents	Description
Configuration Guide	Describes network protocols and related mechanisms that supported by the product, with configuration examples.
Command Reference	Describes the related configuration commands, including command modes, parameter descriptions, usage guides, and related examples.

Documentation Conventions

The symbols used in this document are described as below:

Caution This symbol brings your attention to some helpful suggestions and references.

Note This symbol means that you must be extremely careful not to do some things that may damage the device or cause data loss.

Chapter 1 Product Overview

RG-AP630 is a wireless access point (AP) designed by Ruijie for next-generation high-speed wireless LAN. Adhering to the latest 802.11ac standard, the AP delivers an access rate of up to 1.75Gbps. It features security, radio frequency (RF) control, mobile access, Quality of Service (QoS), and seamless roaming, and can be managed by RG-WS series wireless access controllers (ACs) to implement wireless data forwarding, security, and access control.

The IP67 design adapts Ruijie to inclement outdoor environment, for instance, chillness in northern China and humidity in southern China. This extremely simplifies installation and maintenance. And the built-in directional and omni-directional Ruijie patent X-sense smart antennas offer flexible antenna switch and full coverage for various outdoor circumstances. Moreover, the multi-hop and point-to-multi-points bridging enhances the deployment. The AP fed by IEEE 802.3at-compliant PoE accommodates various monitors and receives real-time monitoring information. It is greatly ideal for campuses, branch offices, ports, transportation, public security, city blocks, complexes, storage and logistics, tourist attractions, and other sites.

Technical Specifications

Table 1-1 Technical Specifications of RG-AP630

Model	**RG-AP630 (Directional)**	**RG-AP630 (Omni-directional)**
Dimensions (L×W×H)	276 mm × 246 mm × 90 mm	
Maximum Transmit Rate	1.75Gbps	
Operating Frequency	802.11b/g/n: 2.4 to 2.483GHz 802.11ac/a/n: 5.15 to 5.85GHz	
Maximum Transmit Power	27dBm	
Antenna Type	Integrated directional antenna	Integrated omni-directional antenna
Antenna Gain	2.4GHz: 10dBi 5GHz: 10dBi	2.4GHz: 4dBi 5GHz: 4dBi
Lobe Width	2.4G: E:45° : H:60° 5G: E:25° : H:60°	N/A
Interfaces	One 10/100/1000 Base-T uplink Ethernet port One SFP uplink port (combo) One 10/100/1000 Base-T downlink PoE port	
Fat/Fit Mode Switching	Supported	
LED	System status LED WDS RSSI LED	
PoE	IEEE 802.3af/at compatible PoE PSE-capable	
Power Consumption	<25w	

Temperature	Operating: -40 to 60℃ (-40 to 140℉) Storage: -40 to 85℃ (-40 to 185℉)
Humidity	Operating: 0% to 100% (non-condensing) Storage: 0% to 100% (non-condensing)
IP Rating	IP67
Weight	<2.5kg
Safety Standards	GB4943, EN60601-1-2 (medical care), UL/CSA 60950-1, EN/IEC 60950-1, EN/IEC 60950-22
EMC Standards	GB9254-2008, EN301 489, EN55022, FCC Part15, RSS-210

Table 1-2 LEDs of RG-AP630

LED	State	Meaning
System status	Blinking green	Initialization in progress
	Solid red & green	Initialization is complete, but no CAPWAP connection.
	Solid green	Initialization is complete, and the AP is establishing a CAPWAP connection with an AC.
	Solid red	Warnings
WDS RSSI (3 LEDs in total)	1 solid on	< -70dBm
	2 solid on	-70 to -50dBm
	3 solid on	> -50dBm

Product Appearance

The AP provides 1 ETH1/PoE IN port (RJ45), 1 ETH2/PoE OUT port (RJ45), 1 SFP compo port, 1 Console port, and 6 N-type antenna connectors.

Figure 1-1 Product Appearance of RG-AP630

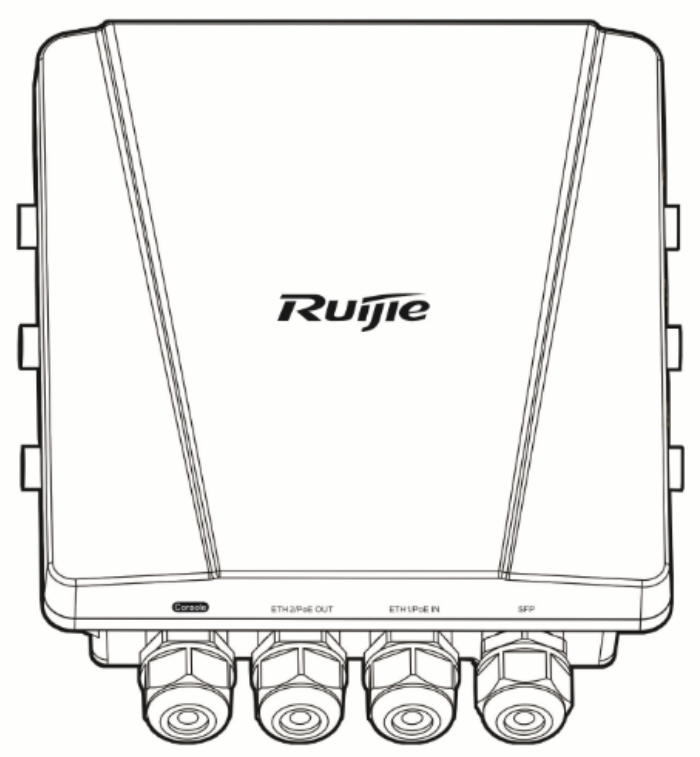

Front View

Figure 1-2 Front View of RG-AP630

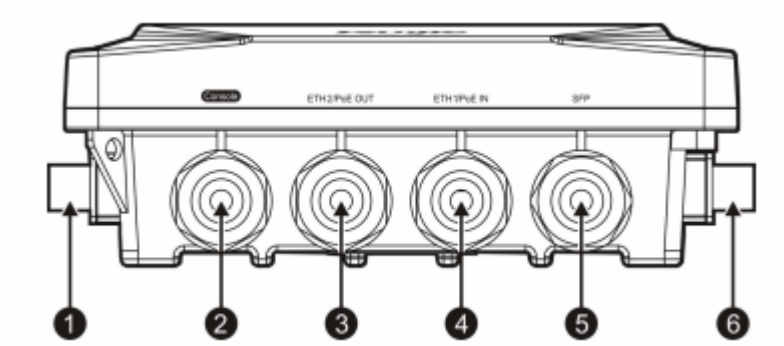

Note:	1. 2.4GHz antenna connector 3.10/100/1000 Base-T auto-sensing Ethernet/PoE OUT port 5. SFP combo port	2. Console port 4.10/100/1000 Base-T auto-sensing Ethernet/PoE IN port 6. 5GHz antenna connector

Power Supply

The AP supports 802.3af/at compatible PoE.

Chapter 2 Preparing for Installation

Note To prevent device damage and bodily injury, please read carefully the safety recommendations described in this chapter.

Note The recommendations do not cover all possible hazardous situations.

Grounding and Lightning Protection

- Use galvanized steel flat bar (or copper) as horizontal grounding conductor. The steel size should be less than 40 mm x 40 mm. Use galvanized angle steel as vertical grounding conductor. The steel length should be 2.5 m and the size should be less than 50 mm x 50 mm x 5 mm. The steel pipe wall thickness should be less than 3.5 mm.
- Use galvanized steel flat as a grounding wire. The length of the wire should be less than 30 m and the size should be 40 mm x 4 mm or 50 mm x 5 mm.
- Use copper bars with cross-section dimensions less than 160 mm^2 as ground bus bars. Use copper bars with cross-section dimensions less than 300 mm2 as the main vertical ground wire for tall buildings.
- If the distance between the ground bus bar at each floor and the LEB is short, use stranded copper wires with cross-section dimensions of 16 mm2; if the distance is long, the cross-section dimensions should be greater than 35 mm2.
- Use a shielded network cable and make sure that the devices at the two ends of the cable, and the shielded sleeves are well grounded. Alternatively, run the network cable through the steel pipe and ground the pipe at both ends.
- A high performance lightning arrester is integrated into the AP with 6KV lightening protection. In general, no additional lightening arrester is required. If there is higher requirement for lightening protection, install the lightening arrester with the grounding cable connected. .
- The ground resistance should be less than 5 ohms. In an area with a higher soil resistivity, reduce the soil resistance by spreading ground resistance reducer powder to reduce the soil resistivity.

Preparing Installation Site

- Do not expose the AP to high temperature, dusts, or harmful gases.
- Do not install the AP in an inflammable or explosive environment.
- Keep the AP away from EMI sources such as large radar stations, radio stations, and substations.
- Do not subject the AP to unstable voltage, vibration, and noises.

- Keep the AP at least 500 meters away from the seaside and do not face it toward the wind from the sea.
- The installation site should be free from water flooding, seepage, dripping, or condensation.
- The installation site should be selected according to network planning and features of communications equipment, and considerations such as climate, hydrology, geology, earthquake, electric power, and transportation.

Temperature and Humidity

Table 2-1 Required Temperature and Humidity for the RG-AP630 Series

Operating Temperature	-40 to 65 ℃ (-40 to 149 °F)
Operating Humidity	0% to 100% (non-condensing)

Outdoor Installation

The AP can be installed outdoors. It can be mounted on a wall or pole.

Waterproof

Use a seal plug to seal the unused ports.

Figure 2-1 Seal Plug

Use water-tight adapter to connect cables to the AP. For details, see Chapter 3 “Installing the Access Point”.

Figure 2-2 Water-tight Adapter

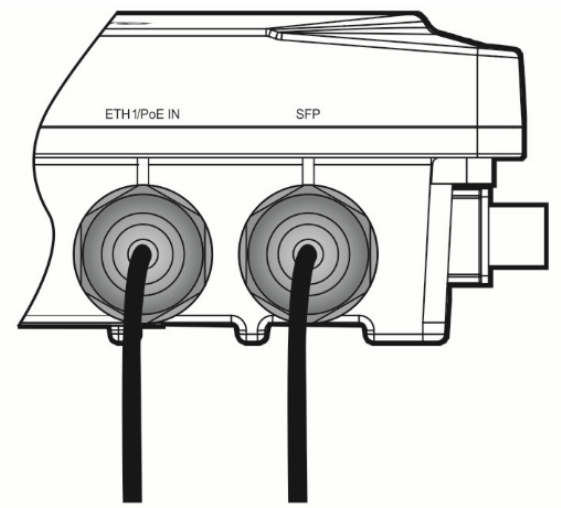

EMI

All interference sources, either from outside or inside of the device or application system, affect the device by capacitive coupling, inductive coupling, or electromagnetic waves.

Electromagnetic interference (EMI) occurs due to electromagnetic radiation or conduction, depending on the transmission path.

Radiation interference occurs when energy, usually radio frequency energy, is emitted from a device and propagated through space that disturbs other victims. The interference source can be part of disturbed system or a fully electrically isolated unit. Conduction interference occurs when interference is transferred from one unit to another unit through cables, which are usually electromagnetic wires or signal cables connected between the source and the victim. Conduction interference often affects the power supply of the device, and can be eliminated by using filters. Radiation interference can influence the path of any signal from the device, which is hard to be shielded.

- Take effective measures against interference from the power grid.
- Keep the AP far away from the grounding or lightning protection devices of power equipment.
- Keep the AP away from high-power radio stations, radar stations, and high-frequency high-current devices.
- Take electrostatic shielding measures.

Fiber Connection

Before connecting fiber cables, make sure the model of the optical transceiver and fiber type match the optical port. The transmit port on the local device should be connected to the receive port on the peer device and vice versa.

Installation Tools

Table 2-2 Installation Tools

Tools	Marker, Phillips screwdriver, slotted screwdriver, drill, paper knife, crimping pliers, diagonal pliers, wire stripper, network cable tester, related power and fiber cables, wrench, hammer, cable ties, ESD tools, multimeter

Note The tool kit is customer supplied.

Checking before Installation

Please check your goods carefully against the packing list. If there are any errors, please contact your distributor.

Chapter 3 Installing the Access Point

Note Before installing the AP, make sure you have carefully read the requirements described in Chapter 2.

Installation Flowchart

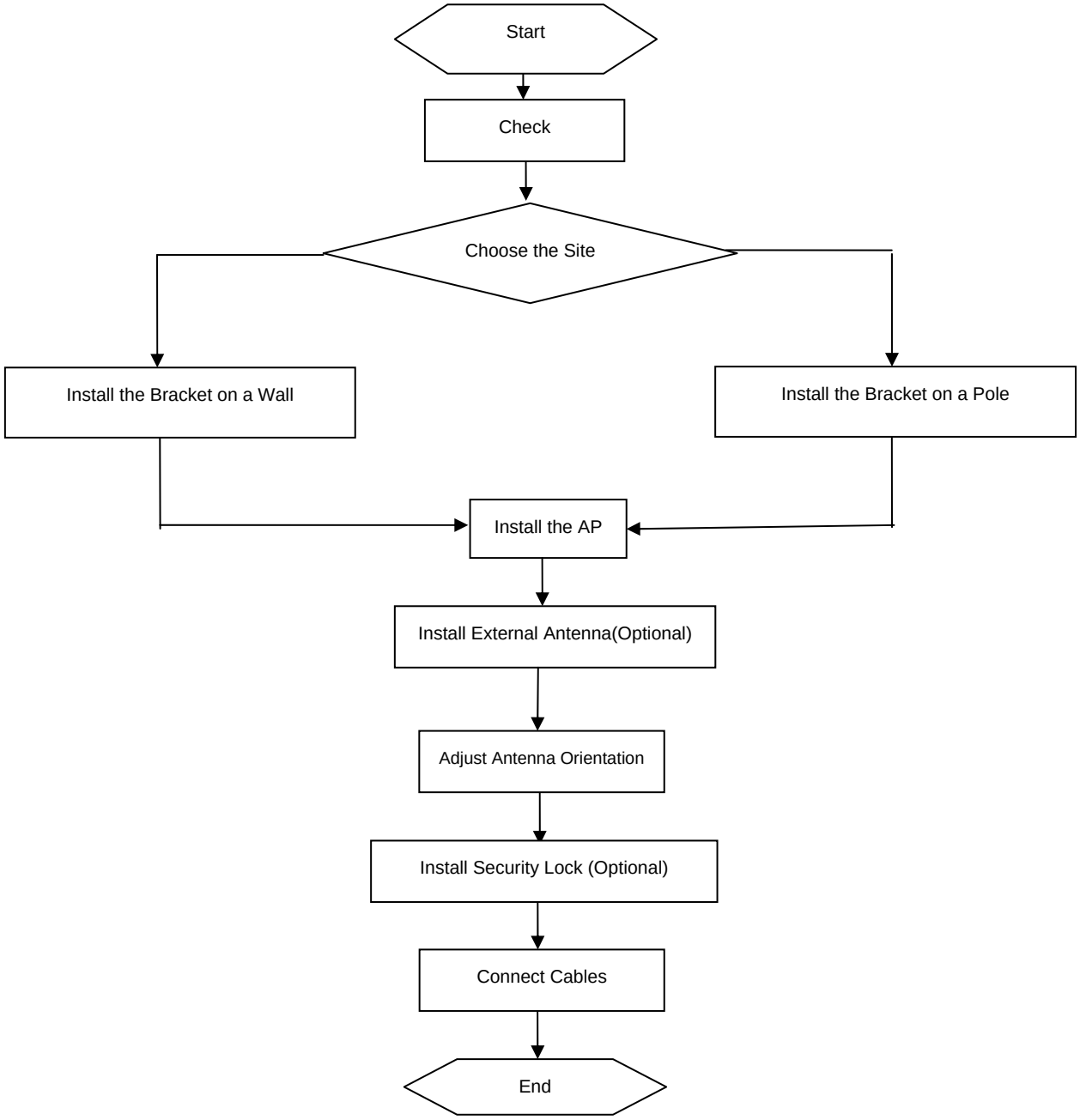

Before You Begin

Before you install the AP, verify that all the parts in the packing list are packed and make sure that:

- The installation site meets temperature and humidity requirements.
- The installation site is equipped with proper power supply.
- Network cables are in place.

Precautions

The outdoor AP can be mounted on a wall (thickness: less than 2.5 mm) and a pole (diameter: 80 to 110mm). If the diameter of the pole is out of the range, the hose clamp is customer-supplied. And the installation site varies with on-the-spot surveys conducted by technical personnel.

Please make full preparation as described in Chapter 2 and observe the following precautions before you install the AP.

- Before connecting the power supply, make sure the external power supply matches the power module inside the AP.
- Before connecting the power cord, make sure the power switch is in the OFF position.
- When connecting a wire to a binding post, make sure their colors are the same.
- Make sure the power supply is properly connected.

Installing the AP

1) Attach the mounting plate to the bottom of the AP and fasten the plate with the supplied M8 x 20mm screws. See Figure 3-1.

Figure 3-1 Fixing the Mounting Plate to the AP

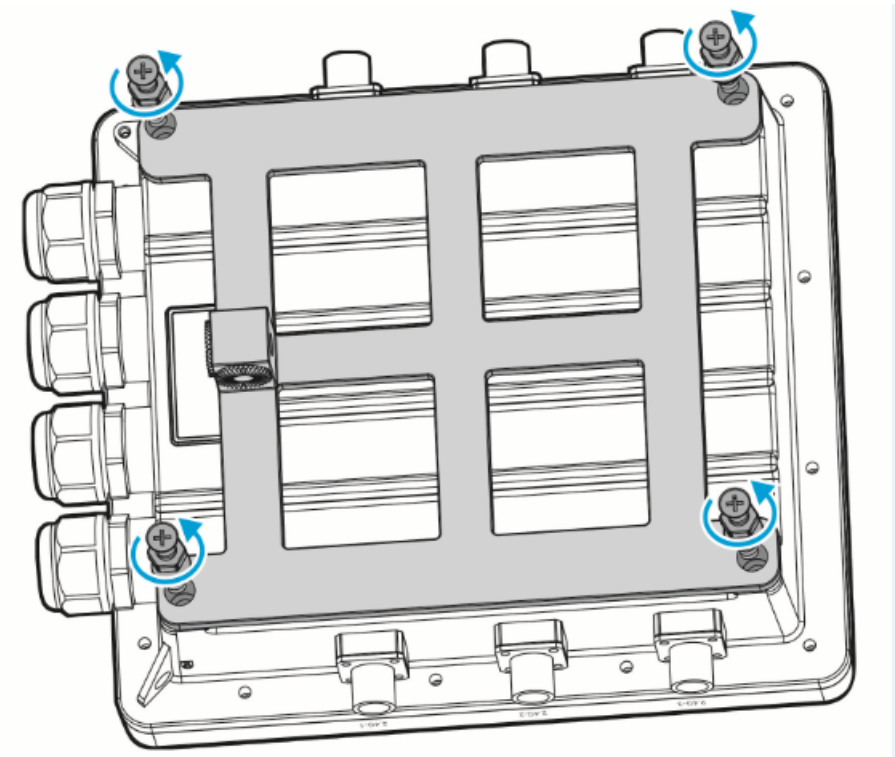

2) Attach the tie rod to the mounting plate and fasten the rod with the supplied M8 x 40 screws. See Figure 3-2

Figure 3-2 Fixing the Tie Rod on the Mounting Plate

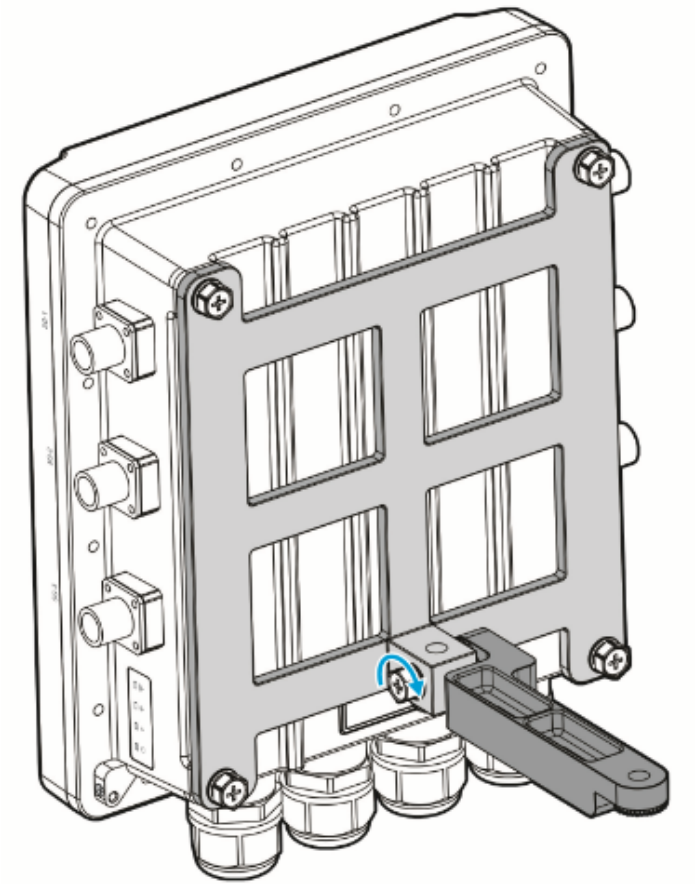

■ Wall mount

3) Use the supplied cross-shaped bracket and M8 x 60 screws to implement the wall mount.

a. Attach the cross-shaped bracket to the wall and mark the screw hole locations. See figure 3-3.

Figure 3-3 Installing the M8 bolts

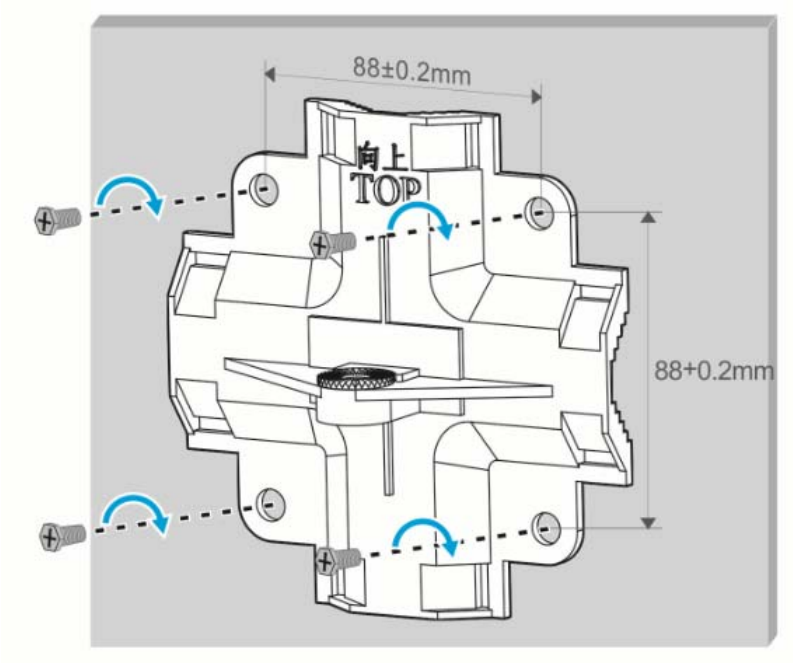

b. Hang the AP with the AP-side mounting bracket module to the cross-shaped bracket and tighten the M8×40 screws to secure the AP. See figure 3-4.

Figure 3-1 Wall Mount

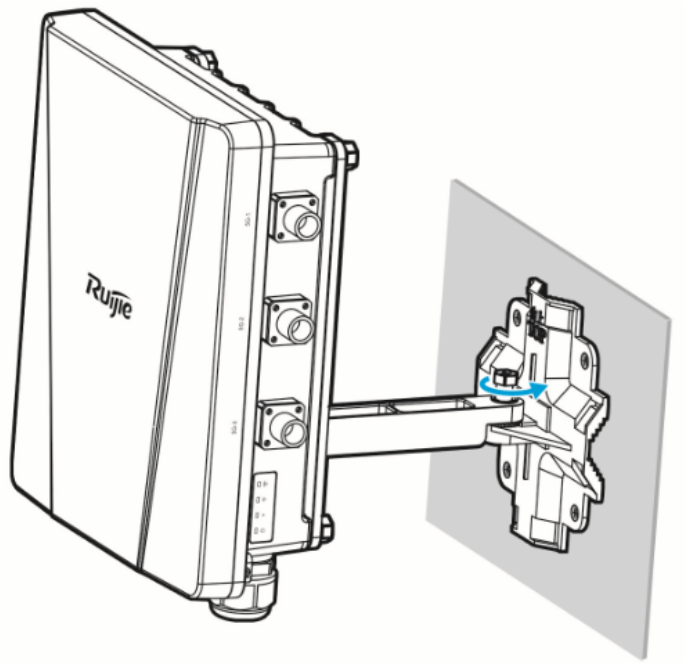

■ Vertical pole mount

a. Attach the cross-shaped bracket to a vertical pole with a hose clamp and fasten the clamp with screws by using the Phillips screwdriver.

Figure 3-2 Fixing the Bracket on a Vertical Pole

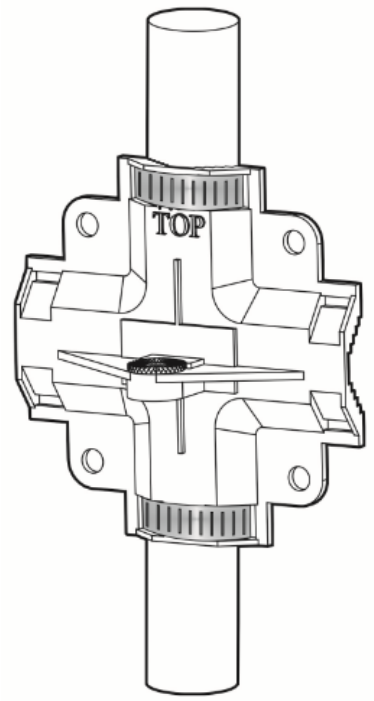

b. Hang the AP with the AP-side mounting bracket module to the cross-shaped bracket and tighten the M8×40 screws to secure the AP. See figure 3-6.

Figure 3-3 Installing the AP on a Vertical Pole

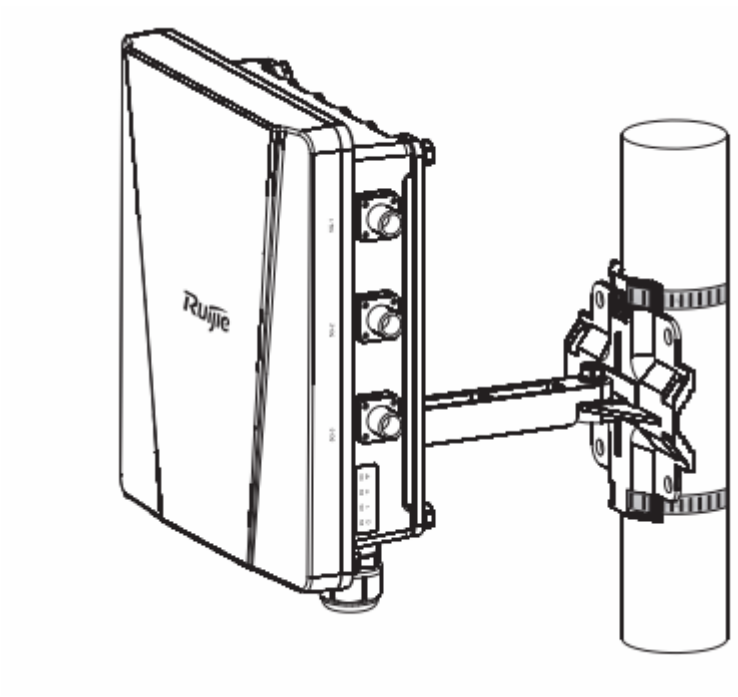

- Horizontal pole mount

Figure 3-7 Fixing the Bracket on a Horizontal Pole

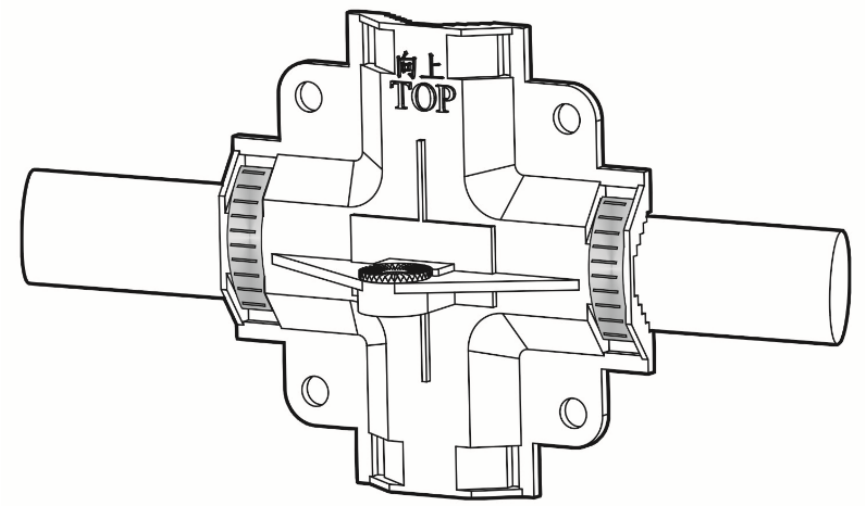

Figure 3-4 Installing the AP on the Horizontal Pole

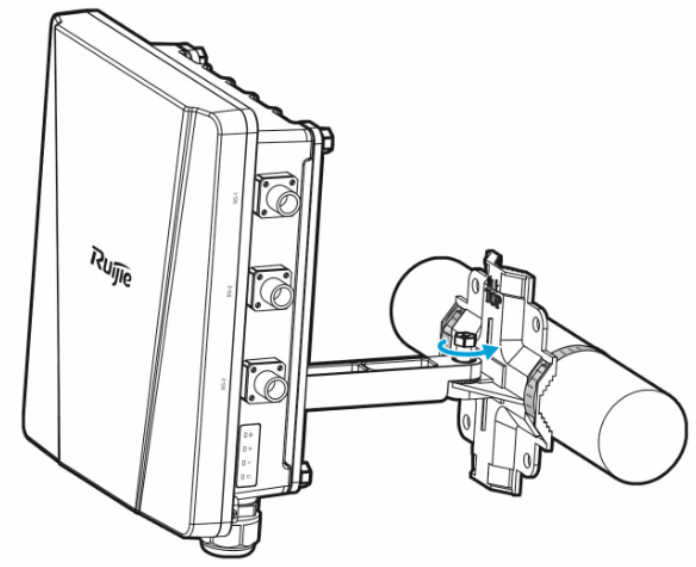

Note The procedure of horizontal pole mount is similar as that of vertical mount.

Adjusting Antenna Orientation

Both directional and omni-directional antennas are available for RG-AP630. The integrated antenna is in parallel with the upper shell. To change the antenna orientation, you should adjust the position of the mounting plate.

Directional Antenna Orientation

Figure 3-5 Anticlockwise Horizontal Rotation (-60°)

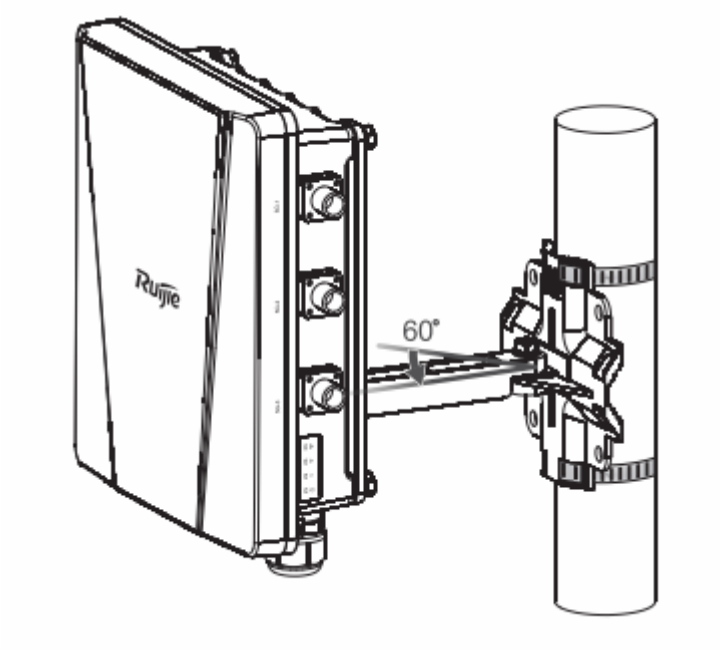

Figure 3-6 Clockwise Horizontal Rotation (+60°)

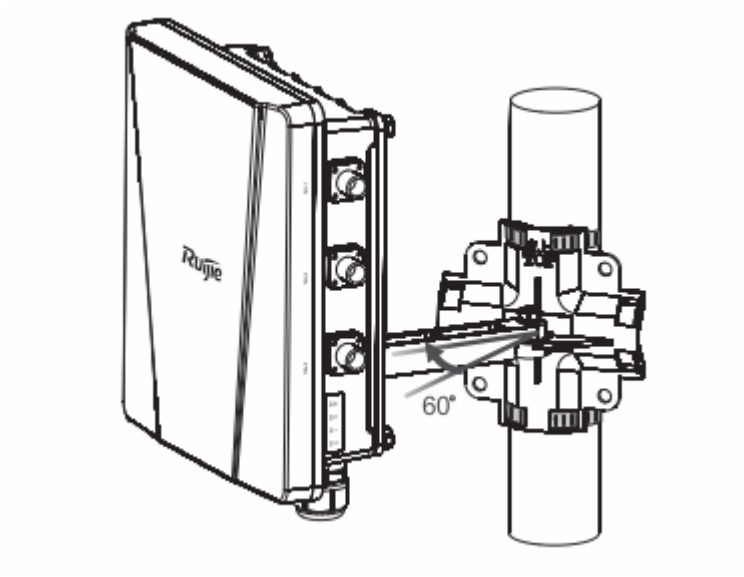

(-60° to ±60° horizontal rotation available)

Figure 3-7 Vertical Rotation (0°)

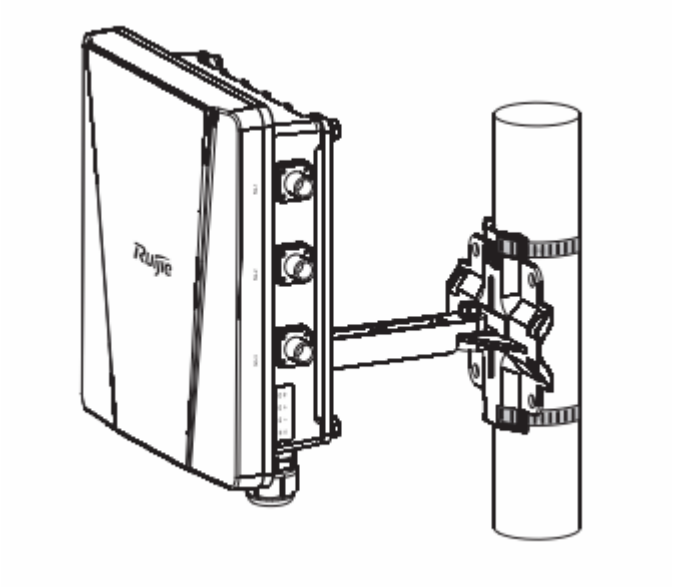

Figure 3-8 Clockwise Vertical Rotation (+60°)

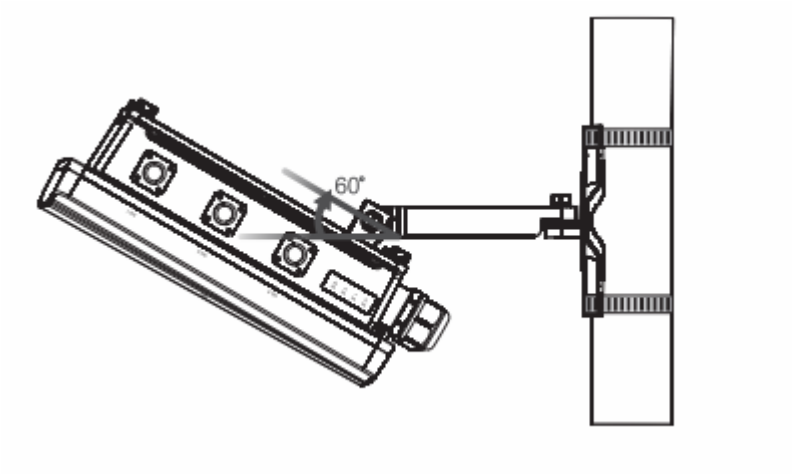

(0° to 90° vertical rotation available)

Omni-directional Antenna Orientation

Figure 3-9 Anticlockwise Vertical Rotation (-90°)

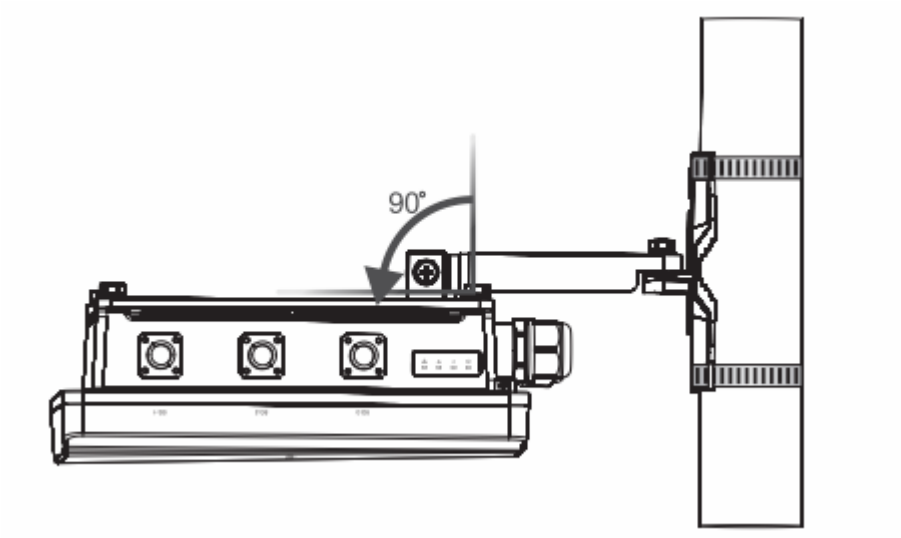

Installing Security Lock (Optional)

Note The security lock is customer-supplied.

The lock loop on the AP is for your security needs. You can fasten the AP to a fixture as follows:

1) Fasten the cable of a security lock to a fixture;
2) Secure the lock plate into the lock loop.

Figure 3-10 Lock Loop

Connecting Cables

Connecting the grounding cable

The grounding cable is made on site. Connect the supplied grounding wire (yellow-green) to the AP grounding hole on one end and ground the wire on the other end through OT terminals. To avoid waste, adjust the cable length on actual demands.

Figure 3-11 Grounding the AP

Connecting the network cable

Note Waterproof material is customer-supplied.

1) Trim the network cable according to the distance between the AP and the power supply.
2) Thread the cable through liquid-tight adapter and add a plug to the end. See figure 3-16.

Figure 3-12 Threading the Network Cable

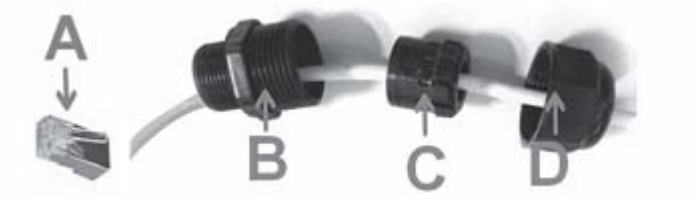

3) Wrap the cable between B and C up with two or three layers of liquid-tight material. See figure 3-17.

Figure 3-13 Wrapping liquid-tight Material around Cable

4) Insert the plug into the PoE IN port and tighten B, C and D in order.

Caution Make sure the plug is correctly inserted. The plug gets damaged when the liquid-tight adapter is wrenched improperly.

Caution Before removing the network cable, dismantle the liquid-tight adapter first and then the plug.

Installing Outdoor Antennas (Optional)

Outdoor antennas fall into directional and omni-directional antennas.

Note The integrated RG-AP630 antenna meets the demands in most cases. To obtain external antennas for special occasions, go to http://www.ruijie.com.cn/.

Installing Outdoor Directional Antennas

- To protect your outdoor directional antennas from lightning strikes, install a lightning rod on top of the pole.
- When installing the pole on the roof, install the pole on a wall or concrete block. Make sure the pole is exactly vertical to ground.
- To ground the antenna pole, connect the pole to a ground grid with a stainless steel (40 mm x 4 mm).
- Install the outdoor directional antenna to the pole with the supplied brackets. See Figure 3-12.

Figure 3-18 Mounting the Outdoor Directional Antenna on the Pole

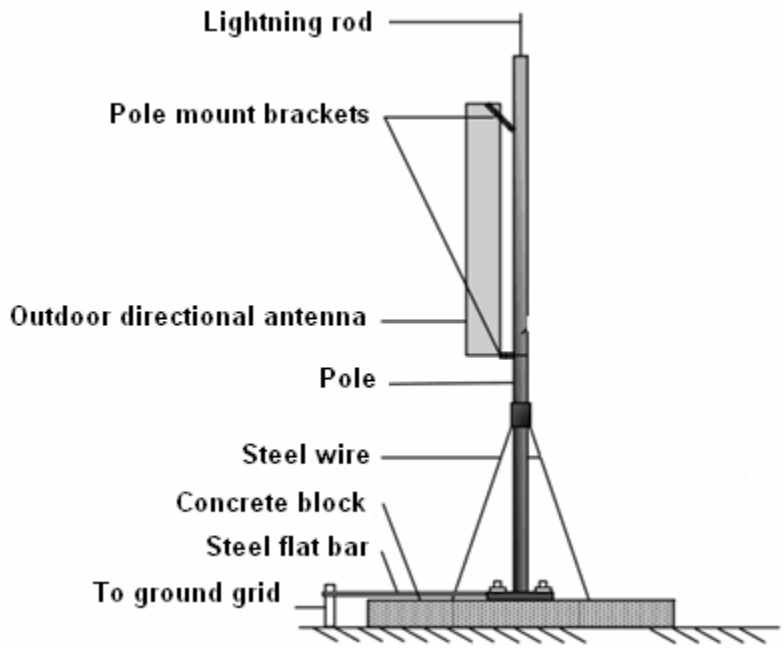

Installing Outdoor Omni-directional Antennas

- Omni-directional antennas must be kept at least one meter away from any metal. Therefore, do not weld the lightning rod on the pole installed with an omni-directional antenna. Place the lightning rod in the middle of two omni-directional antennas. See Figure 3-13.
- When installing the antenna on the pole, make sure the top and bottom pole clamps are level to the ground and parallel to each other.

- Ensure the height of the antenna can provide desired signal coverage.
- Ensure the top of the antenna is within the 45° protection angle.

Figure 3-19 Mounting the Outdoor Omni-directional Antennas

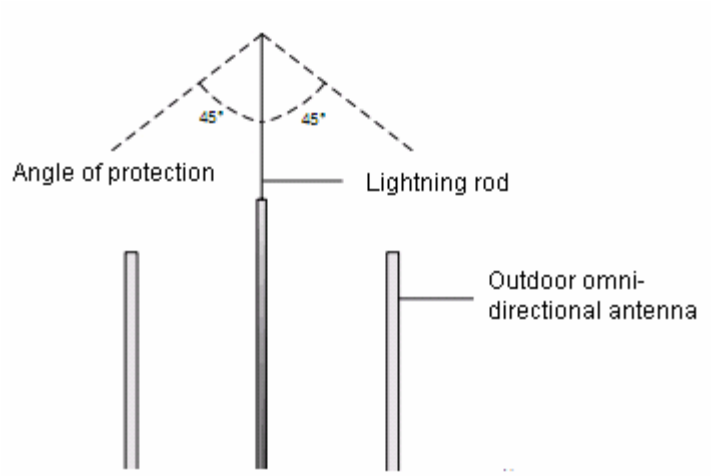

Appendix A Connectors and Media

1000BASE-T/100BASE-TX/10BASE-T

The 1000BASE-T/100BASE-TX/10BASE-T is a 10/100/1000 Mbps auto-negotiation port that supports auto MDI/MDIX.

Compliant with IEEE 802.3ab, 1000BASE-T requires Category 5e 100-ohm UTP or STP (STP is recommended) with a maximum distance of 100 meters (328 feet).

1000BASE-T requires all four pairs of wires be connected for data transmission, as shown in Figure A-1.

Figure A-1 1000BASE-T Connection

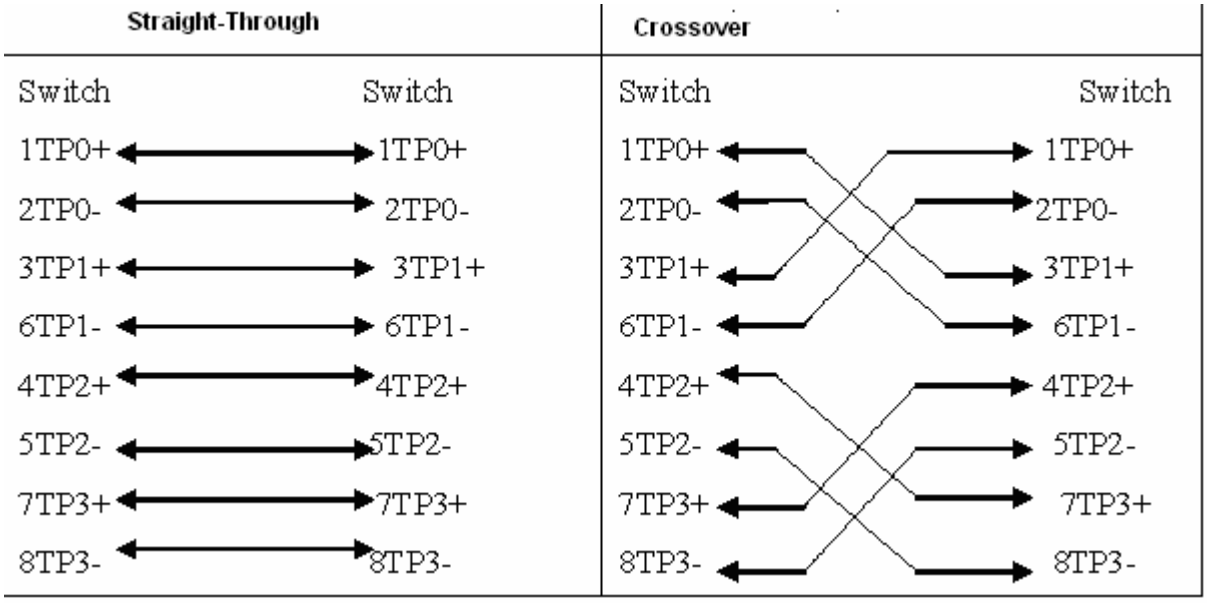

10BASE-T uses Category 3, 4, 5 100-ohm UTP/STP and 1000BASE-T uses Category 5 100-ohm UTP/STP for connections. Both support a maximum length of 100 meters. Table A-1 shows 100BASE-TX/10BASE-T pin assignments.

Table A-1 100BASE-TX/10BASE-T Pin Assignments

Pin	Socket	Plug
1	Input Receive Data+	Output Transmit Data+
2	Input Receive Data-	Output Transmit Data-
3	Output Transmit Data+	Input Receive Data+
6	Output Transmit Data-	Input Receive Data-
4,5,7,8	Not Used	Not Used

Figure A-2 shows wiring of straight-through and crossover cables for 100BASE-TX/10BASE-T.

Figure A-2 100BASE-TX/10BASE-T Connection

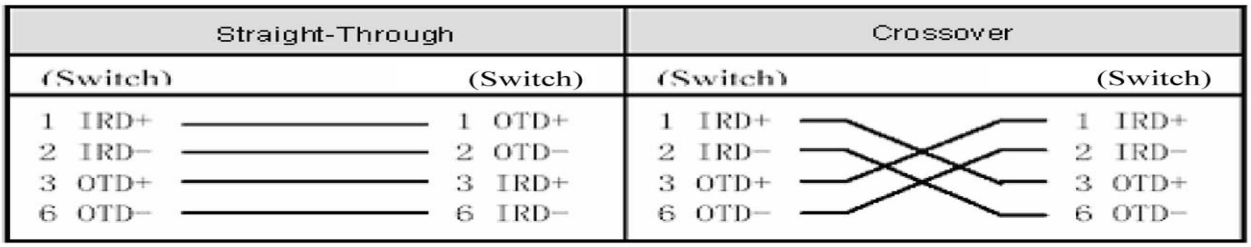

Fiber Connection

You can choose to use single mode or multi-mode fibers according to the transceiver module types. Figure A-3 shows connection of fiber cables.

Figure A-3 Fiber Connection

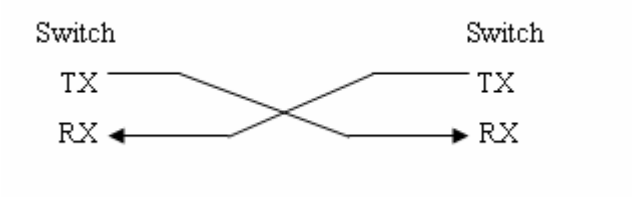

Appendix B Mini-GBIC Module Specifications

Ruijie provides various Gigabit SFP transceivers (Mini-GBIC modules) for interfaces of wireless access controllers. You can select the most suitable SFP modules as needed. This appendix describes the models and specifications of some of the Gigabit SFP transceivers for your reference.

Mini-GBIC (SFP) Models and Specifications

Table B-1 Models and Specifications of SFP Modules

Mini-GBIC(SFP)	Wavelength (nm)	Fiber Type	Core Size (micron)	Modal Bandwidth (MHz/km)	Cable Distance	Max Transmit (dBm)	Max Receive (dBm)	Standards
FE-SFP-LX-MM1310	1310	MMF[1]	62.5/125	—	2 km	-14	-14	IEEE802.3
FE-SFP-LH15-SM1310	1310	SMF[2]	9/125	—	15 km	-8	-8	
Mini-GBIC-SX	850	MMF[1]	62.5 62.5 50.0 50.0	160 200 400 500	220 m 275 m 500 m 550 m	-4	-17	
Mini-GBIC-LX	1310	MMF[1] SMF[2]	62.5 50.0 50.0 9/10	500 400 500 —	550 m 550 m 550 m 10 km	-3	-20	
Mini-GBIC-LH40	1310	SMF[2]	9/125	—	40 km	3	-3	
Mini-GBIC-ZX50	1550	SMF[2]	—	—	50 km	0	-22	
Mini-GBIC-ZX80					80 km	4.7	-22	
Mini-GBIC-ZX100					100 km	5	-9	
Mini-GBIC-GT	—	Cat 5 UTP	—	—	100 m	—	—	

[1] MMF=Multimode fiber

[2] SMF=Single mode fiber

Note When using shorter distances of single-mode fiber for optical SFP transceivers with cable distance greater than 40 km (including 40 km), you may need to insert an in-line optical attenuator in the link to avoid overloading the receiver.

Appendix C 10-Year Hazardous Material Contents

Table C-1 Hazardous Material Contents Statements of Ruijie Products

Parts Name	Hazardous Material or Element					
	Plumbum (Pb)	**Mercury (Hg)**	**Cadmium (Cd)**	**Hexavalent Chromium (Cr(VI))**	**Polybrominated Biphenyl (PBB)**	**Polybrominated Diphenylethers (PBDE)**
PCBA	×	○	○	○	○	○
Other Electronic Parts	×	○	○	○	○	○
Cables	×	○	○	○	○	○
Metal Parts	×	○	○	○	○	○
Plastic & Polymeric Parts	○	○	○	○	○	○
Battery	○	○	○	○	○	○

○: Indicates that the contents of the poisonous hazardous substance in the component are less than the limit specified in the SJ/T 11363-2006 standard.

X: Indicates that the contents of poisonous hazardous substance in at least one even materials of the component exceed the limit specified in the SJ/T 11363-2006 standard.

Note:

This table lists the substances that may be included in Ruijie products. The preceding substances may not be included in different models. Please check the contents of the actual model.

Except for special signs, the icon on the right is the mark of environment-friendly use period of the product. The above use period is applicable to products only working in conditions as stipulated in the product manual.